Changes for the Better

MITSUBISHI ELECTRIC

Hoists General Catalog

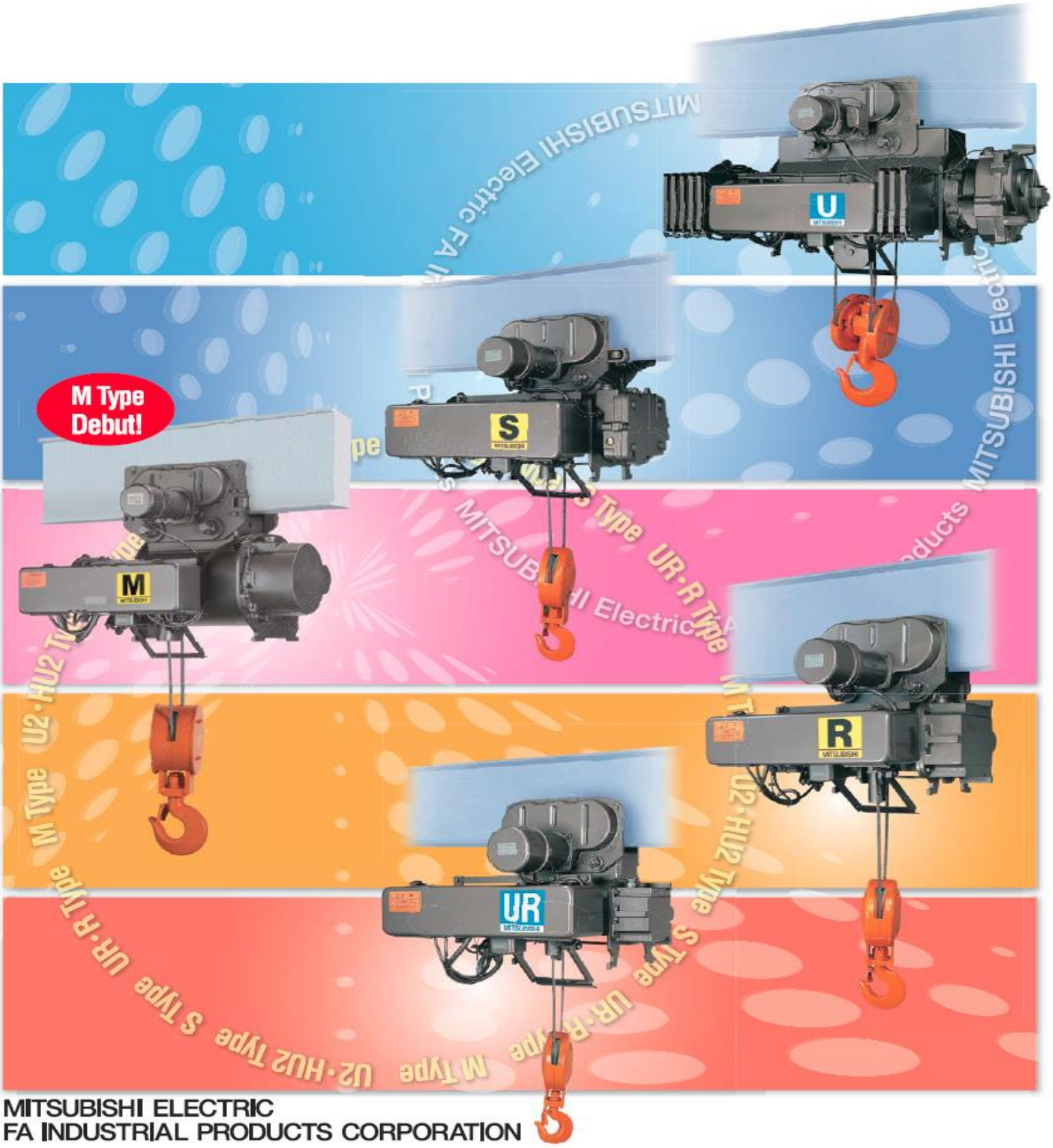

MITSUBISHI ELECTRIC
FA INDUSTRIAL PRODUCTS CORPORATION

R Type Series

Regular type **Utilitarian type** **1t～2.8(3)t**

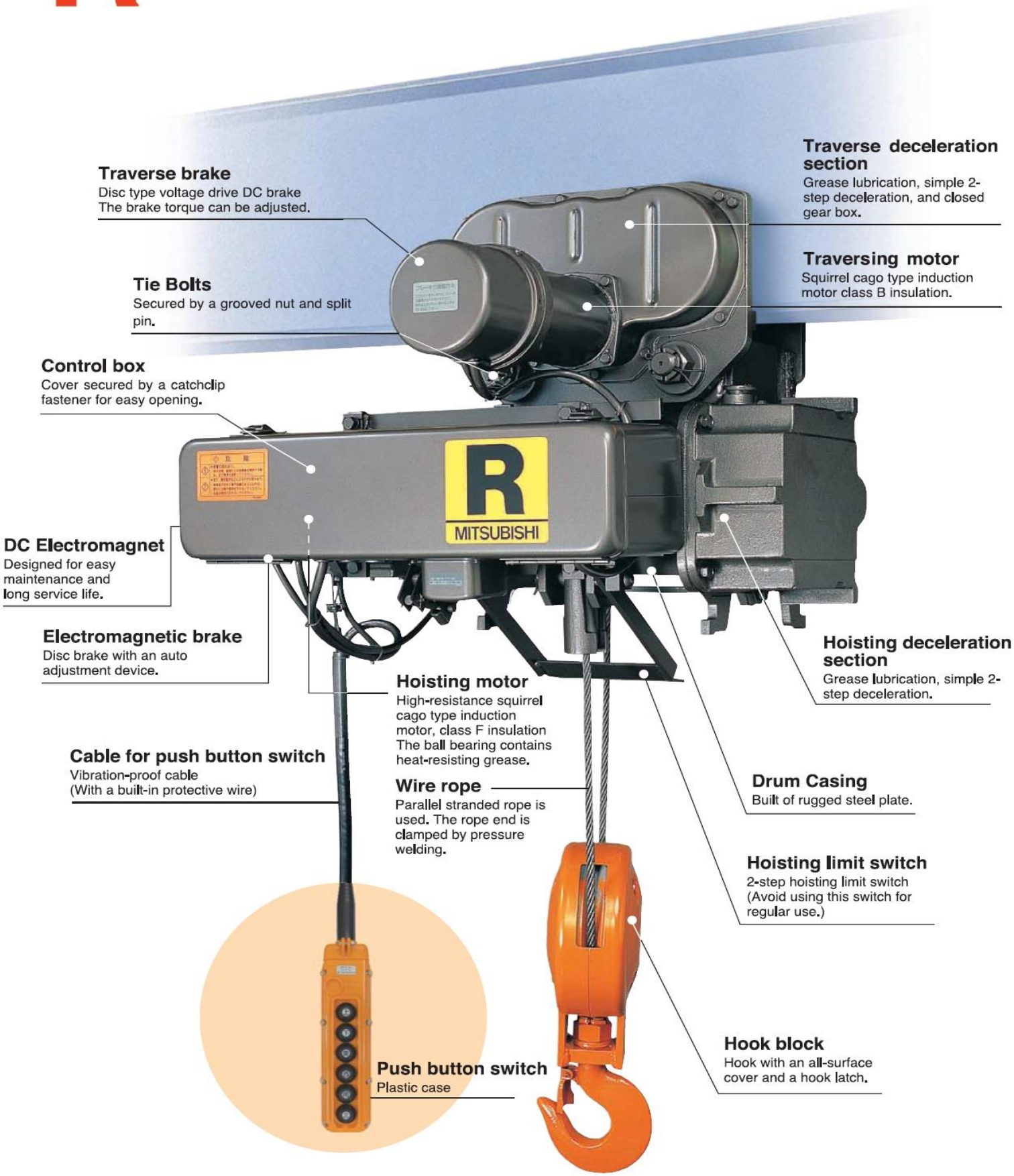

R type copes with both one-class higher capability and economical efficiency.

Specifications

Type	Capacity(t)	Lift(m) Low	Lift(m) High	Wire rope: Monorail type 2 falls	Wire rope: Double rail type Low head type 4 falls	Wire rope: Rope specification	Hoisting: Speed m/s (m/min) 50 Hz	Hoisting: Speed m/s (m/min) 60 Hz	Hoisting: Motor Output (kW) 50 Hz	Hoisting: Motor Output (kW) 60 Hz	Hoisting: Motor Rated Current (A) 50 Hz	Hoisting: Motor Rated Current (A) 60 Hz	Hoisting: Motor Poles	Traversing: Mono-rail · Low hearoom: Speed m/s (m/min) 50 Hz	Traversing: Mono-rail · Low hearoom: Speed m/s (m/min) 60 Hz	Traversing: Mono-rail · Low hearoom: Motor Output (kW) 50 Hz	Traversing: Mono-rail · Low hearoom: Motor Output (kW) 60 Hz	Traversing: Mono-rail · Low hearoom: Motor Rated Current (A) 50 Hz	Traversing: Mono-rail · Low hearoom: Motor Rated Current (A) 60 Hz	Traversing: Mono-rail · Low hearoom: Motor Poles	Traversing: Double-rail: Speed m/s (m/min) 50 Hz	Traversing: Double-rail: Speed m/s (m/min) 60 Hz	Traversing: Double-rail: Motor Output (kW) 50 Hz	Traversing: Double-rail: Motor Output (kW) 60 Hz	Traversing: Double-rail: Motor Rated Current (A) 50 Hz	Traversing: Double-rail: Motor Rated Current (A) 60 Hz	Traversing: Double-rail: Motor Poles
R	1	6	12	φ8 ※1	φ6.3	6×W(19) B class JIS-G3525	0.112 (6.7)	0.133 (8)	1.2	1.4	7.4	7.9	4	0.35 (21)	0.417 (25)	0.22	0.26	1.6	1.5	4	—	—	—	—	—	—	—
R	2	6	12	φ10	φ8	6×Fi(29) B class JIS-G3525	0.1 (6)	0.12 (7.2)	2.2	2.6	13.1	13.2	4	0.35 (21)	0.417 (25)	0.5	0.6	3.2	3.1	4	—	—	—	—	—	—	—
R	2.8	6	12	φ12.5	φ9	6×Fi(29) B class JIS-G3525	0.1 (6)	0.12 (7.2)	3	3.6	19	19.4	4	0.35 (21)	0.417 (25)	0.5	0.6	3.2	3.1	4	0.35 (21)	0.417 (25)	0.5	0.6	3.2	3.1	4
R	3	6	12	φ12.5	φ9	6×Fi(29) B class JIS-G3525	0.1 (6)	0.12 (7.2)	3.2	3.8			4	0.35 (21)	0.417 (25)	0.5	0.6	3.2	3.1	4	0.35 (21)	0.417 (25)	0.5	0.6	3.2	3.1	4

※1 Rope specification of 1t 2falls is 6×Fi(29)

Note 1: High lift models (Low-head type1~2.8t,Double rail type2.8t)are not available.

Standard specifications

●**Power supply**···3-phase 200V 50/60Hz control 200V, 220V 60Hz control 220V
(400V class is also available)···3-Phase 400V 50/60Hz control 200V, 440V 60Hz control 220V
3-Phase 380V 50Hz control 48V (100V and 24V are also abailable)

●**Operating method**···Push button switch operations.

	1/2~3t
Suspended type Frame mounted type	2 Points
	U D
Motor operated traversing hoist	6 Points
	U D E W S N

●**Rating**···30 min. (JIS C 9620)

●**Power supply system**···Both trolley feeding and cable feeding are available. Howeve, neither trolley nor cable is attached.

●**Enclosure**···Simplified outdoor type(JISC 0920, Equivalent to IP44)
(Rainproof cover is required, when it is used in the open air.)

●**Applicable standard**···JIS C 9620 electric hoist/crane structure standard

●**Color coating**···Main body:Metallic gray (Equivalent to MunsellN4.0)
Hook block:Munsell 7.5YR7/14
Pushbutton:Equivalent to Munsell 7.5YR7/14

●**Ambient air temperature**···-10℃ to 40℃(Non congelation)

●**Ambient relative humidity**···90% or less (Non condensing)

Note:These hoists cannot be used for lift (elevator for passengers.)

Monorail Type UR・R (1t・2t・2.8(3)t)

※UR type…Contact us for 400V class outline

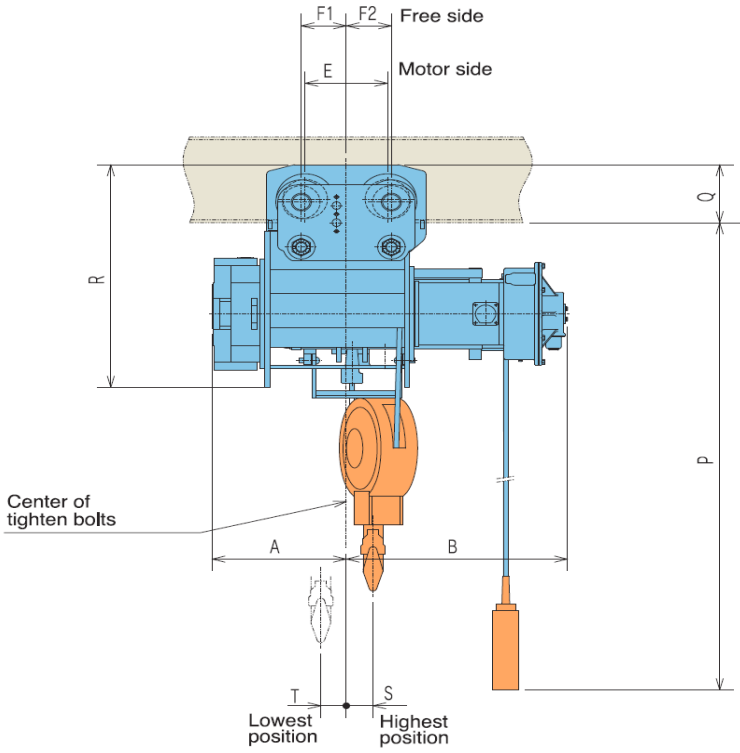

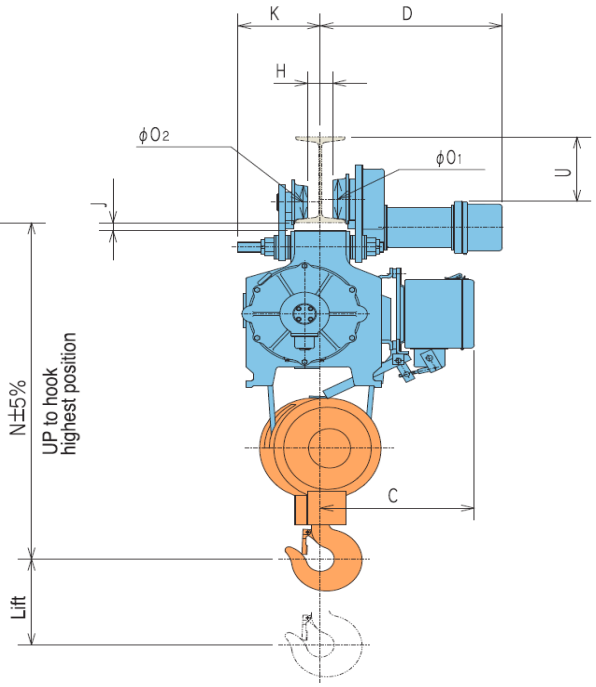

Model		UR-1-LMH3 UR-1-LMS3 R-1-LM3		UR-1-HMH3 UR-1-HMS3 R-1-HM3			UR-2-LMH3 UR-2-LMS3 R-2-LM3		UR-2-HMH3 UR-2-HMS3 R-2-HM3			UR-2.8(3)-LMH2 UR-2.8(3)-LMS2 R-2.8(3)-LM2		UR-2.8(3)-HMH2 UR-2.8(3)-HMS2 R-2.8(3)-HM2		
Cap.(t)		1					2					2.8				
Lift(m)		6		12			6		12			6		12		
Dimensions(mm)	A	283		489			284		485			343		558		
	B	468		507			532		566			565		610		
	C	347					368					393				
	E	200					210					210				
	F1	105		170			115		205			115		205		
	F2	120		170			115		165			115		165		
	K	182					210					210				
	N	730					840					980				
	O_1/O_2	80/72					114/96					114/96				
	P	6000		12000			6000		12000			6000		12000		
	R	535					585					649				
	S	76		117			73		108			68		115		
	T	49		132			47		130			65		150		
Min.rad.curvature(m)		1.8(3.0)/[4.5]		3.0/[7.5]			2.5/[6]		3.5/[8.5]			2.5/[6]		3.5/[8.5]		
Weight(kg)		150		170			230		260			320		360		
Hook block weight(kg)		7.5					15					27				
I-Beam related dimensions		D	H	J	Q	U	D	H	J	Q	U	D	H	J	Q	U
Applicable I-Beam(mm)	150×75×5.5	360	24	33	140	105	—	—	—	—	—	—	—	—	—	—
	200×100×7	372	48	33	140	155	453	40	31	167	140	—	—	—	—	—
	250×125×7.5	385	74	31	142	203	465	64	29	169	188	465	64	24	169	188
	300×150×11.5						478	90	19	179	228	478	90	14	179	228
	450×175×13															
	600×190×13	—														

Note.1.Min.rad.cur( )denotes the case of using below I beam. 2.Applicable I-Beam = Standard 3.Min.rad.cur [ ] UR Type with traversing inverter R-1, UR-1…150×75×5.5 4. =required special attachment

Suspended Type UR・R (1t・2t・2.8(3)t)

※UR type…Contact us for 400V cass outline

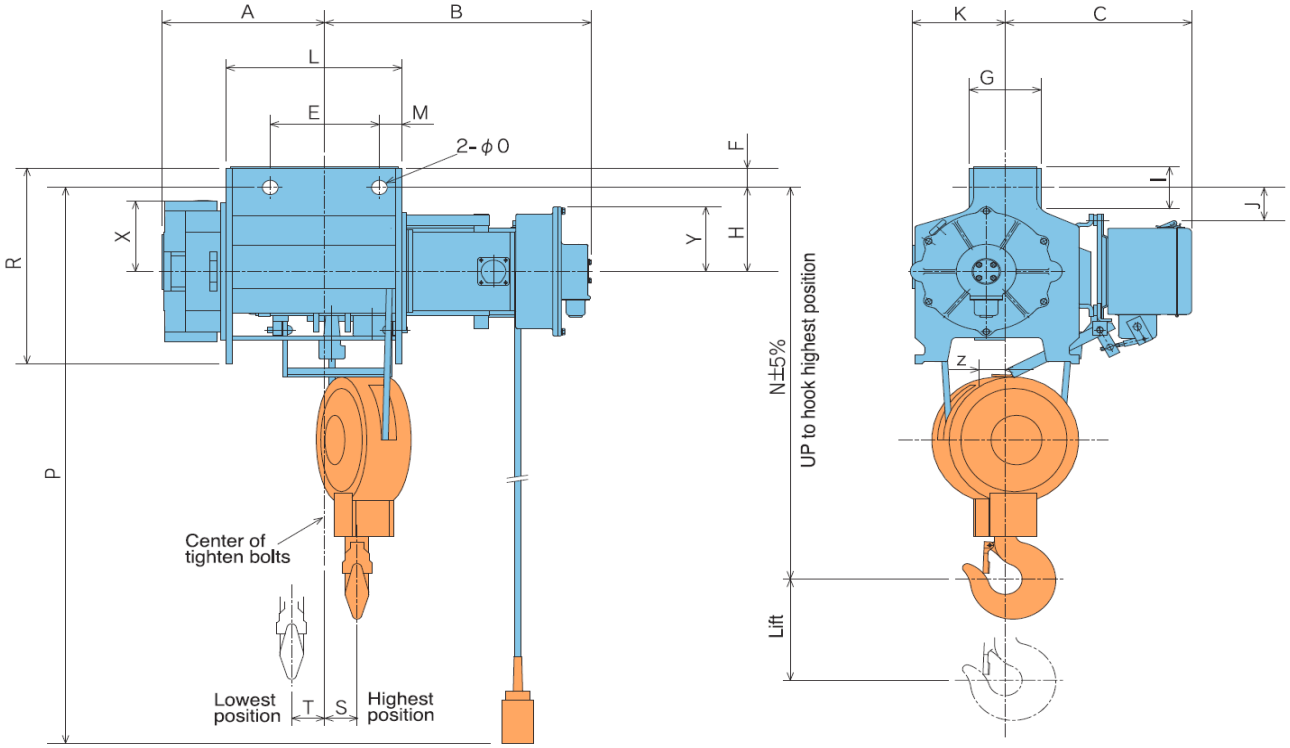

Remarks:Clamping bolts are avavilable separately.

Model		UR-1-LKH3 R-1-LK3	UR-1-HKH3 R-1-HK3	UR-2-LKH3 R-2-LK3	UR-2-HKH3 R-2-HK3	UR-2.8(3)-LKH2 R-2.8(3)-LK2	UR-2.8(3)-HKH2 R-2.8(3)-HK2
Cap.(t)		1		2		2.8	
Lift(m)		6	12	6	12	6	12
Dimensions(mm)	A	283	489	284	485	343	558
	B	468	507	532	566	565	610
	C	347		368		393	
	E	230		230		230	
	F	33		43		48	
	G	117		151		151	
	H	160		170		195	
	I	71		83		94	
	J	47		57		77	
	K	182		174		200	
	L	323	568	326	561	370	630
	M	37	76	48	82	47	92
	N	665		765		910	
	O	24		33		33	
	P	6000	12000	6000	12000	6000	12000
	R	363		388		457	
	S	76	117	73	108	68	115
	T	49	132	47	130	65	150
	X	109		141		165	
	Y	85		105		150	
	Z	46		41		40	
Weight(kg)		120	135	170	200	260	300
Hook block weight(kg)		7.5		15		27	

caution

Please read "Product Manual" ahead of the use to use the product correctly and safely.
Though our product is manufactured under a strict quality control, Please set up the safety device before application to equipment to which the occurrence of a serious accident and the loss is forecast due to the breakdown of product etc.

MITSUBISHI ELECTRIC FA INDUSTRIAL PRODUCTS CORPORATION
HEAD OFFICE:1-1-1 IMAJUKUHIGASHI NISHI-KU FUKUOKA 819-0192 JAPAN
PHONE＋81-92-805-3400 FAX＋81-92-805-3764

AVAILABLE FROM

MHSE-1309 Sep.2013

Speciffication subject to change without notice

Changes for the Better

MITSUBISHI ELECTRIC

Hoists General Catalog

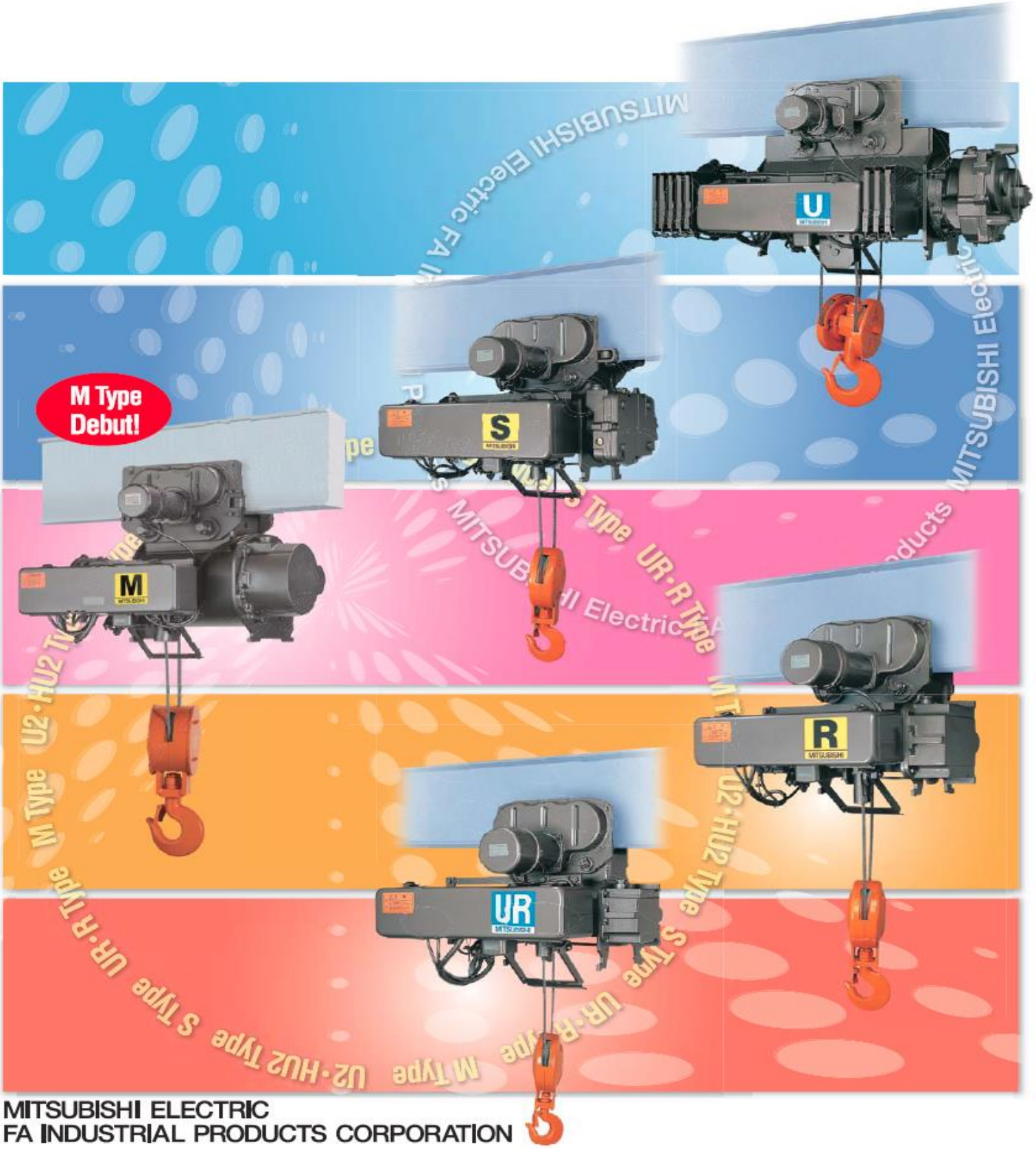

MITSUBISHI ELECTRIC
FA INDUSTRIAL PRODUCTS CORPORATION

S Type Series

Strong type **High speed type** **1/2t～60t**

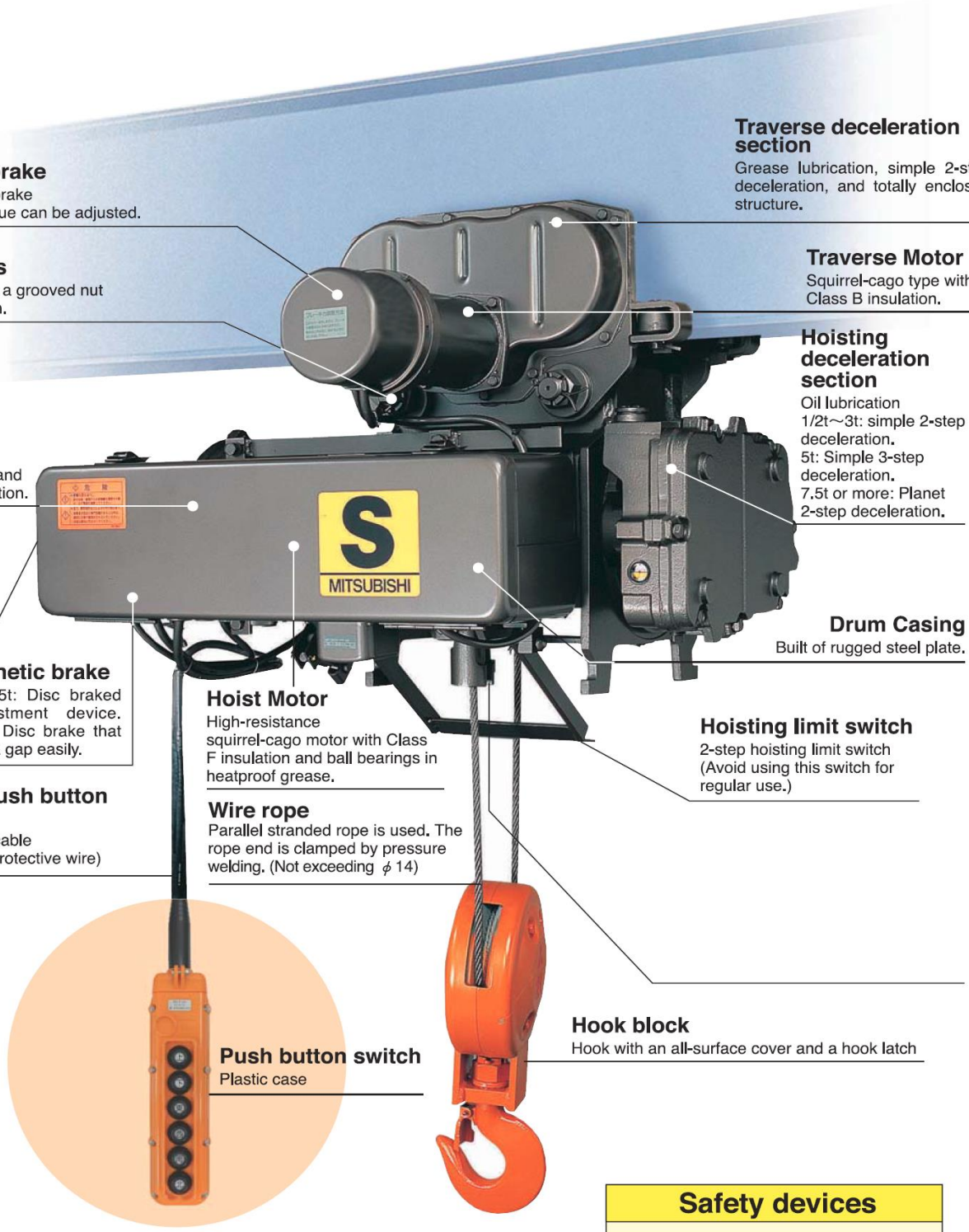

Traverse deceleration section
Grease lubrication, simple 2-step deceleration, and totally enclosed structure.

Traverse brake
Disc type DC brake
The brake torque can be adjusted.

Tie Bolts
Secured by a grooved nut and split pin.

Traverse Motor
Squirrel-cago type with Class B insulation.

Hoisting deceleration section
Oil lubrication
1/2t～3t: simple 2-step deceleration.
5t: Simple 3-step deceleration.
7.5t or more: Planet 2-step deceleration.

Control box
The cover can be opened and closed by one-touch operation.

Electromagnet
Not exceeding 5t: DC electromagnet. More than 7.5t: AC electromagnet.

Drum Casing
Built of rugged steel plate.

Electromagnetic brake
Not exceeding 5t: Disc braked with auto-adjustment device. More than 7.5t: Disc brake that allows to adjust a gap easily.

Hoist Motor
High-resistance squirrel-cago motor with Class F insulation and ball bearings in heatproof grease.

Hoisting limit switch
2-step hoisting limit switch (Avoid using this switch for regular use.)

Cable for push button switch
Vibration-proof cable
(With a built-in protective wire)

Wire rope
Parallel stranded rope is used. The rope end is clamped by pressure welding. (Not exceeding ϕ 14)

Hook block
Hook with an all-surface cover and a hook latch

Push button switch
Plastic case

Safety devices

※Optional equipment:
Over loading alarm (O.L.A) device,
Emergency brake
1t～60t optional equipment

S type offers the best lifting speed, power and durability in this class.

Specifications

Type	Capacity(t)	Lift(m) Low	Lift(m) High	Wire rope: Monorail type 2falls	Wire rope: Monorail type 4falls	Wire rope: Lowhead type 2falls	Wire rope: Lowhead type 4falls	Wire rope: Double railtype 4falls	Rope specification	Hoisting: Speed m/s (m/min) 50 Hz	Hoisting: Speed m/s (m/min) 60 Hz	Hoisting: Motor Output (kW) 50 Hz	Hoisting: Motor Output (kW) 60 Hz	Hoisting: Motor Rated Current (A) 50 Hz	Hoisting: Motor Rated Current (A) 60 Hz	Hoisting: Motor Poles	Traversing: Mono-rail・Low-head: Speed m/s (m/min) 50 Hz	Traversing: Mono-rail・Low-head: Speed m/s (m/min) 60 Hz	Traversing: Mono-rail・Low-head: Motor Output (kW) 50 Hz	Traversing: Mono-rail・Low-head: Motor Output (kW) 60 Hz	Traversing: Mono-rail・Low-head: Motor Rated Current (A) 50 Hz	Traversing: Mono-rail・Low-head: Motor Rated Current (A) 60 Hz	Traversing: Mono-rail・Low-head: Motor Poles	Traversing: Double-rail: Speed m/s (m/min) 50 Hz	Traversing: Double-rail: Speed m/s (m/min) 60 Hz	Traversing: Double-rail: Motor Output (kW) 50 Hz	Traversing: Double-rail: Motor Output (kW) 60 Hz	Traversing: Double-rail: Motor Rated Current (A) 50 Hz	Traversing: Double-rail: Motor Rated Current (A) 60 Hz	Traversing: Double-rail: Motor Poles
S	1/2	6	12	φ6.3	—	φ4	—	6×W (19) B class JISG3525		0.183 (11)	0.217 (13)	1.0	1.2	6.9	6.5	4	0.35 (21)	0.417 (25)	0.22	0.26	1.6	1.5	4	—	—	—	—	—	—	4
	1			φ8 ※3	—	φ6.3	—					2.0	2.4	12.6	12.4									—	—	—	—	—	—	
	2			φ10	—	φ8	—	6×Fi (29) B class JISG3525		0.14 (8.4)	0.167 (10)	2.9	3.5	17.5	18.5				0.5	0.6	3.2	3.1		—	—	—	—	—	—	
	2.8			φ12.5	—	φ9	φ9					4.1	4.9	25.5	27.5									0.35 (21)	0.417 (25)	0.5	0.6	3.2	3.1	
	3			φ12.5	—	φ9	φ9					4.4	5.3	27	28.5															
	5	8		—	φ11.2	φ11.2	φ11.2			0.112 (6.7)	0.133 (8)	6.2	7.5	31	35.5				0.85	1.0	4.8	4.7							
	7.5			—	φ14	φ14	φ14			0.0967 (5.8)	0.117 (7)	8.3	10	37	44		0.2 (12)	0.25 (15)						0.25 (15)	0.3 (18)	0.85	1.0	4.8	4.7	
	10			—	φ16	φ16	φ16			0.0833 (5)	0.1 (6)	10	12	51	55	6			1.5	1.8	8.5	8.1				0.85	1.0	4.8	4.7	
	15			—	φ20	—	φ20					17	20	71	75				0.85 ×2	1.0 ×2	4.8 ×2	4.7 ×2				1.5	1.8	8.5	8.1	
	20	—		—	φ22.4	—	φ22.4			0.07 (4.2)	0.0833 (5)			75	83				1.5 ×2	1.8 ×2	8.5 ×2	8.1 ×2								
	30			—	—	—	φ25	IWRC 6×Fi (29) B class JISG3525		0.0467 (2.8)	0.055 (3.3)			77	84		—	—	—	—	—	—	—			1.5 ×2	1.8 ×2	8.5 ×2	8.1 ×2	
	40	6.5 / —	— / 11.5	—	—	—	φ22.4 (8falls) ※1	6×Fi (29) B class JISG3525		0.035 (2.1)	0.0417 (2.5)			75	83											0.75 ×4	0.75 ×4	4.1 ×4	3.6 ×4	
	45	— / —	12.5 / 19	—	—	—	φ25 (6falls) ※1	IWRC 6×Fi (29) B class JISG3525		0.03 (1.8)	0.0367 (2.2)			77	84															
	60 ※2	—	—	—	—	—	—	—		1.4	1.65	17	20	77	84	6	—	—	—	—	—	—	—	—	—	—	—	—	—	—

※1 40t has 8falls and 45t has 6falls.(Regarding 60t, please inquire sepately)
※2 Please contact us for 60t separatly
※3 Rope specification of 1t 2falls is 6×Fi(29)

Standard specifications

●**Power supply**……3-phase 200V 50/60Hz control 200V, 220V 60Hz control 220V
(400V class is also available)…3-phase 400v 50/60Hz control 200V, 440V 60Hz control 220V
3-phase 380V 50Hz control 48V (100V and 24V are also available)

●**Operating method**……Push button switch operations

	1/2～3t	5～45t
Suspended type Frame mounted type	2 Points	4 Points
	U D	ON OFF U D
Motor operated traversing hoist	6 Points	8 Points
	U D E W S N	ON OFF U D E W S N

●**Rating**…30 min.(JIS C 9620)
●**Power supply system**…Both trolley feeding and cable feeding are available. However, neiter trolley nor cable is attached.
●**Enclosure**…Simplified out door type (JIS C0920, equivalent to IP44)
●**Applicable standard**…JIS C 9620 electric hoist/crane structure standard
●**Color coating**… Main body:Metallic gray(Equivalent to Munsell N4.0)
Hook block:Munsell7.5YR7/14
Pushbutton:Equivalent to Munsell7.5YR7/13
●**Ambient air temperature**…-10℃ to 40℃(Non congelation)
●**Ambient air humidity**…90% or less(Non condensing)

Monorail Type S (1/2t・1t・2.8t・3t・5t)

S-1/2

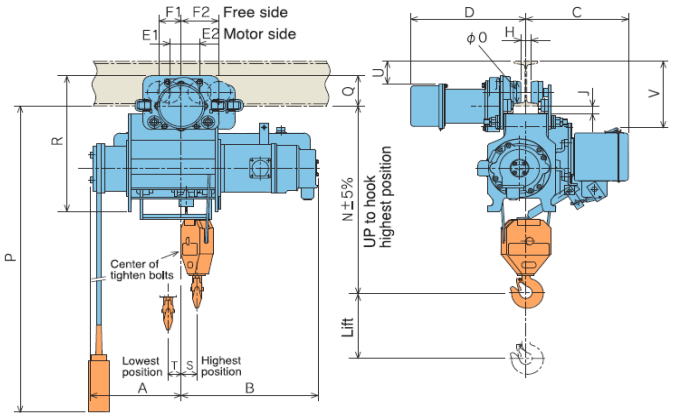

S-1・2・2.8・3

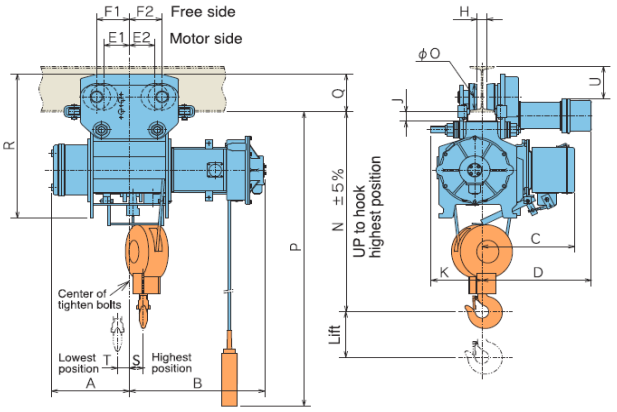

(Shape of S-1/2-HM)

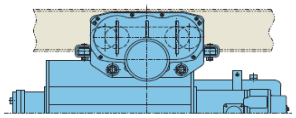

Note: In the case of trolley electric supply type, balance weight is required.

S-5

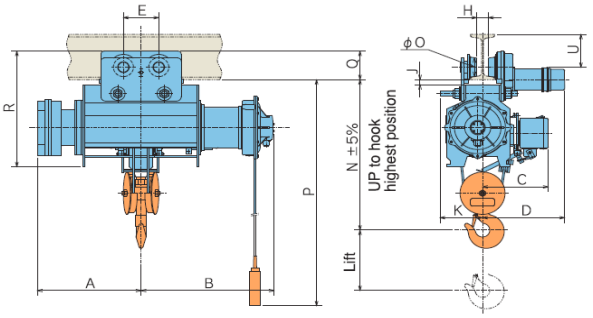

Model		S-1/2												S-1					S-2					S-2.8(3)					S-5				
		LM2						HM2						LM2				HM2	LM2				HM2	LM3				HM3	LM3				HM3
Cap.(t)		1/2												1					2					2.8(3)					5				
Lift(m)		6						12						6				12	6				12	6				12	8				12
Dimensions(mm)	A	287						457						287				474	322				479	341				510	646				771
	B	433						473						518				551	563				593	610				641	830				955
	C	324												345					383					408					410				
	E1	38						100						100					105					105					220				
	E2	58						100						100					105					105									
	F1	70						140						140					135					135					—				
	F2	120						140						140					135					135					—				
	K	—												167					210					216					265				
	N	625						635						735					875					1045					996				
	O	73						80						80					114					114					125				
	P	6000						12000						6000				12000	6000				12000	6000				12000	8000				12000
	R	455						505						545					632					720					766				
	S	50						93						71				105	58				101	60				97	—				
	T	58						123						42				119	49				113	47				115	—				
Min.rad.curvature(m)		1.2(4.0)						1.8(7.0)						1.8(7.0)					1.8(5.0)					2.0					5.0				
Weight(kg)		115						135						165				180	280				305	375				410	560				630
Hook block weight(kg)		4.5												7.5					15					27					42				
I-Beam related dimensions		D	H	J	Q	U	V	D	H	J	Q	U	V	D	H	J	Q	U	D	H	J	Q	U	D	H	J	Q	U	D	H	J	Q	U
Applicable I-Beam(mm)	150×75×5.5	364	30	27	100	75	222	360	24	33	140	105	233	360	24	33	140	105	—					—					—				
	200×100×7	376	54	26	101	125	271	372	48	33	140	155	283	372	48	33	140	155	453	40	41	167	140	—					—				
	250×125×7.5							385	74	31	142	203	331	385	74	31	142	203	465	64	39	169	188	465	64	34	169	188	—				
	300×150×8																		478	90	38	170	237	—					—				
	300×150×11.5	—																	478	90	29	179	228	478	90	24	179	228	512	72	31	189	219
	450×175×13	—																											524	96	27	193	365
	600×190×13	—						—						—																			

Note.rad.cur( )at I-Beam ●S-1/2,S-1…150×75×5.5 ●S-2…200×100×7 Note Applicable I-Beam =Standard =required special attachment

Monorail Type S (7.5t・10t・15t・20t)

S-7.5・10

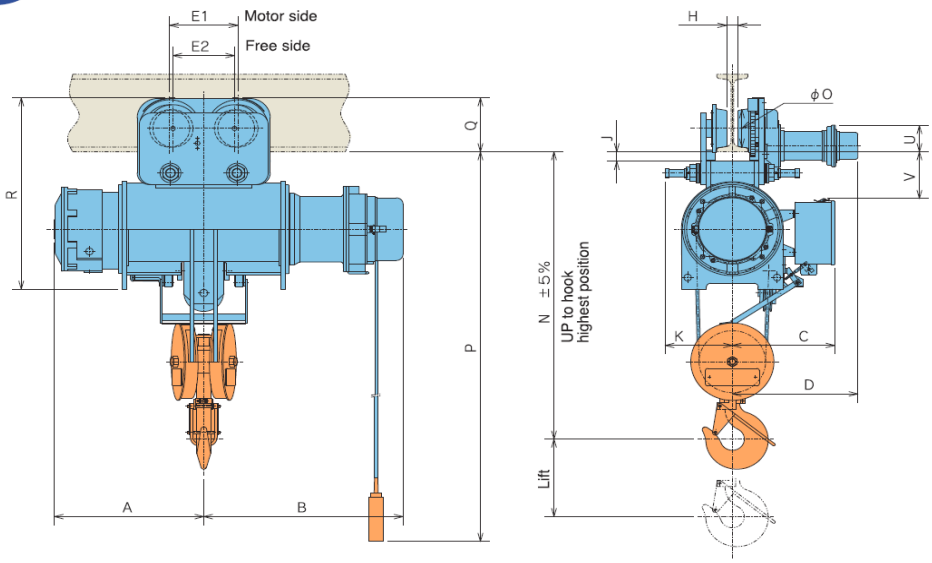

S-15・20

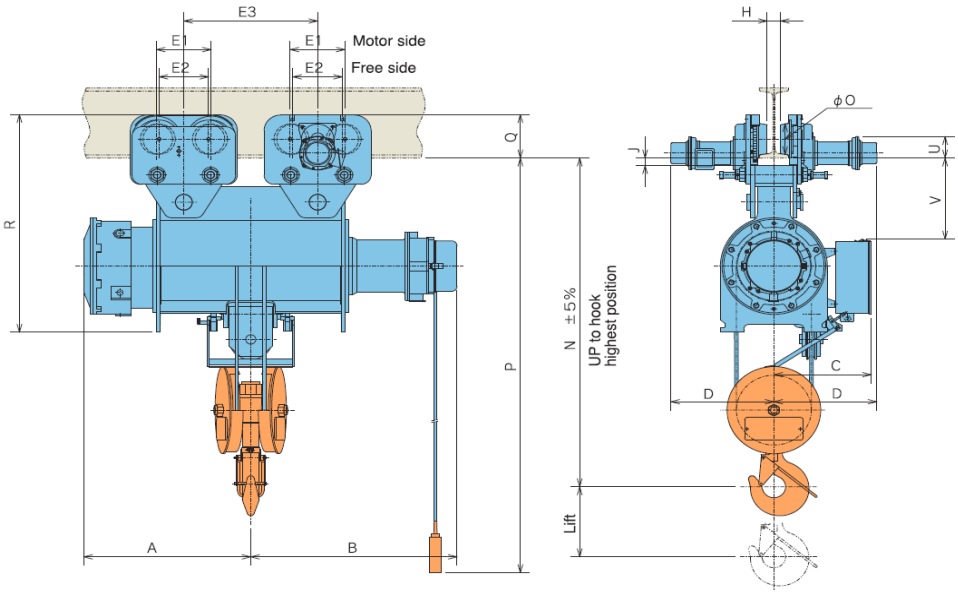

Model		S-7.5						S-10						S-15						S-20					
		LM			HM			LM			HM			LM			HM			HM					
Cap.(t)		7.5						10						15						20					
Lift(m)		8			12			8			12			8			12			12					
Dimensions(mm)	A	669			794			719			844			799			949			999					
	B	1004			1129			959			1084			1085			1235			1235					
	C	458						493						558						583					
	E1	300						328						300						328					
	E2	270						296						270						296					
	E3	—						—						620			800			800					
	K	314						323						—						—					
	N	1270						1450						1930						2090					
	O	173						193						173						193					
	P	8000			12000			9000			13000			9000			13000			13000					
	R	903						988						1268						1398					
Min.rad.curvature(m)		5.0						5.0						Straight line						Straight line					
Weight(kg)		850			920			1200			1300			2100			2250			2600					
Hook block weight(kg)		80						100						190						280					
I-Beam related dimensions		D	H	J	Q	U	V	D	H	J	Q	U	V	D	H	J	Q	U	V	D	H	J	Q	U	V
Applicable I-Beam(mm)	400×150×12.5	578	60	49	254	117	181	604	54	49	279	141	241	—						—					
	450×175×13	590	85	49	254	117	181	616	78	49	279	141	241	590	85	49	254	117	416	616	81	49	279	141	521
	600×190×13	598	100	50	253	116	182	624	94	50	278	140	242	598	100	50	253	116	417	624	96	50	278	140	522

Note Applicable I-Beem ▭ =Standard

Double rail Type S (2.8t·3t·5t)

S-2.8・3

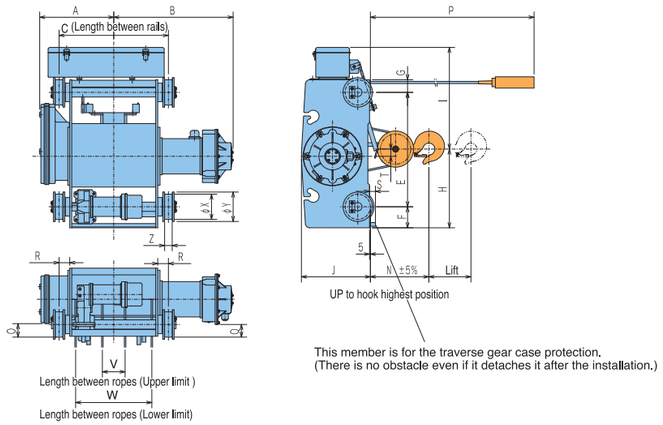

S-5

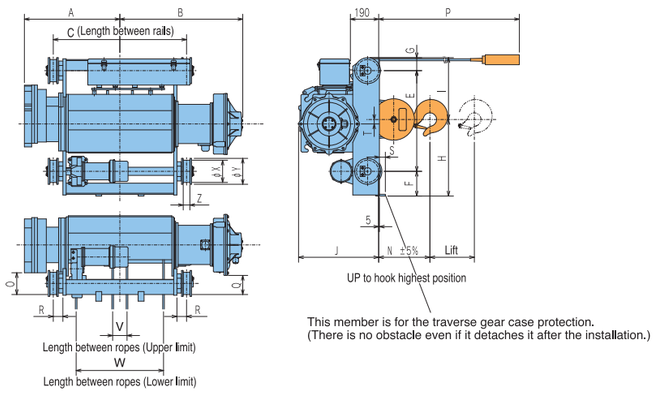

Model		S-2.8 (3)		S-5	
		LR3A	HR3A	LR3A	HR3A
Cap.(t)		2.8 (3)		5	
Lift(m)		6	12	8	12
Dimensions(mm)	A	440	590	646	771
	B	711	861	830	955
	C	650	950	900	1150
	E	680		680	
	F	125		167	
	G	75		88	
	H	468		517	
	I	605		418	
	J	410		541	
	N	345		346	
	O	52		125	
	P	6000	12000	8000	12000
	Q	75		129	
	R	63		65	
	S	35		40	
	T	43		30	
	V	113	105	97	100
	W	433	733	590	840
	X	150		150	
	Y	175		175	
	Z	45		45	
Weight(kg)		425	475	660	740
Hook block weight(kg)		25		42	
Applicable Rail		12kg rails or 38mm steel square bars			

Double rail Type S (7.5t·10t·15t·20t·30t)

S-7.5・10・15・20

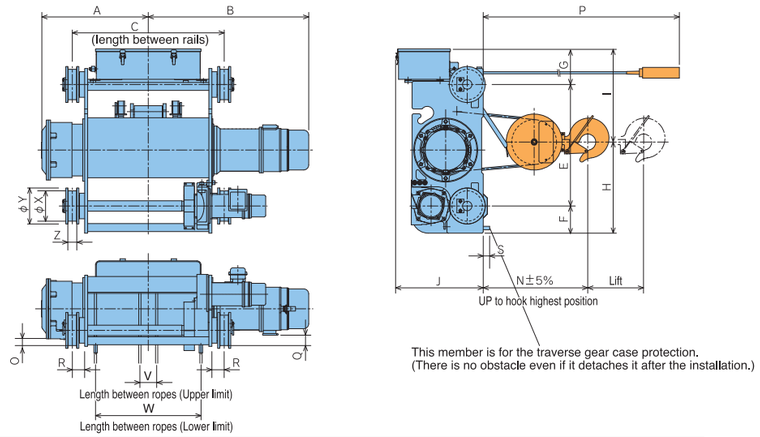

S-30

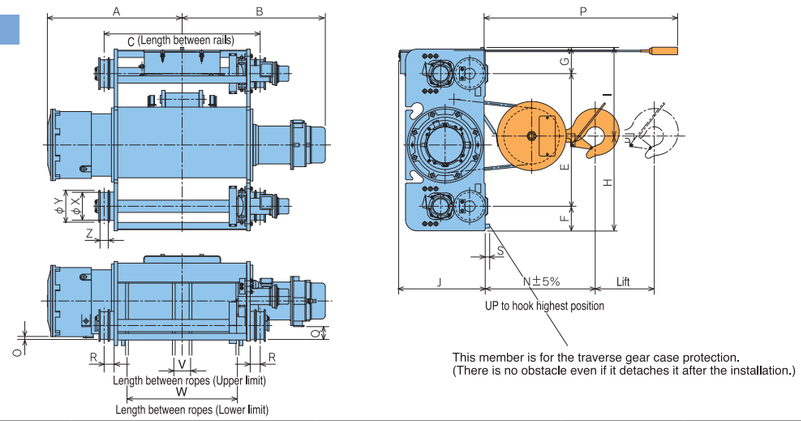

Model		S-7.5		S-10		S-15		S-20-HR	S-30-HR
		LR	HR	LR	HR	LR	HR		
Cap.(t)		7.5		10		15		20	30
Lift(m)		8	12	8	12	8	12	12	12
Dimensions(mm)	A	669	794	719	844	799	949	999	1209
	B	1004	1129	959	1084	1085	1235	1235	1285
	C	950	1200	950	1200	1000	1300	1300	1400
	E	760		840		1000		1045	1190
	F	170		170		220		220	220
	G	223		233		243		248	246
	H	570		613		760		790	850
	I	583		630		703		723	806
	J	543		543		743		748	763
	N	630		710		860		910	1020
	O	40		38		30		32	15
	P	8000	12000	8000	12000	8000	12000	12000	12000
	Q	75		30		85		120	115
	R	77		82		84		84	89
	S	45		55		55		55	45
	T	50		53		70		70	80
	V	105	80	100	100	110	135	125	150
	W	660	910	620	870	660	960	945	990
	X	190		190		250		250	250
	Y	225		225		285		285	285
	Z	52		52		58		58	73
Weight(kg)		900	980	1250	1360	1900	2100	2500	3600
Hook block weight(kg)		80		100		190		280	380
Applicable Rail		15kg rails or 44mm steel square bars				22kg rails or 50mm steel square bars			37kg rails or 65mm steel square bars